Remarks: Pollution Level (3)/Overvoltage Category (II)/Material Group (I)

REV	ECN	SIGN	DATE	DESCRIPTION
1.1	V1	K. ZHAO	2024/12/19	Drawing update parameters

Number of Positions	4P	
Coding	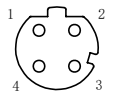	
Current/Voltage	4A/250V	
Voltage Proof	1.4kV	
Rated Impulse Voltage	2.5kV	
Wire specifications	0.34mm²/22AWG	
Wire Color	PIN	WIRE
	1	Brown
	2	White
	3	Blue
	4	Black

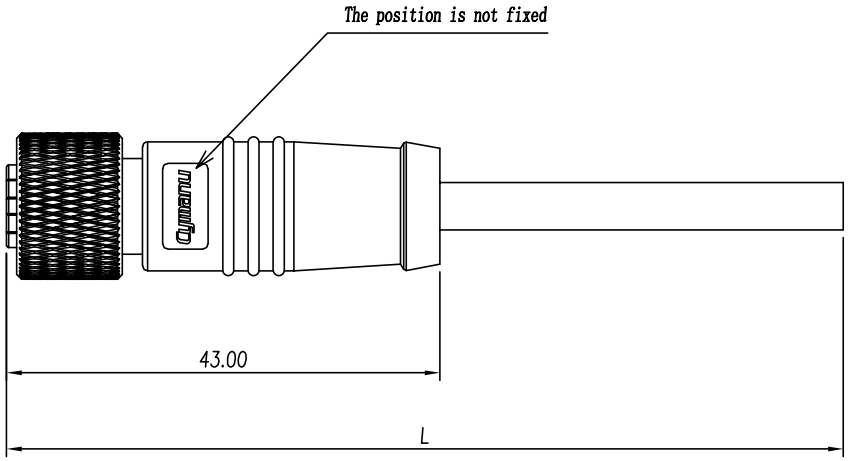

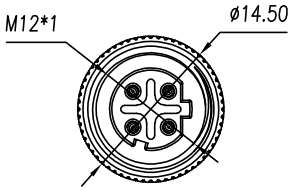

Technical Parameter:

1. Insulation Resistance: ≥100MΩ
2. Contact Resistance: ≤10mΩ
3. Durability: ≥100 cycles
4. Locking Torque: 0.4Nm
5. Compliant with RoHS
6. Protection Level: IP68
   (1 meter water depth, 24 hours); IP69K
7. Cable: PVC/PUR sheathed wire, black outer sheath
8. Temperature Range: −25℃~85℃
9. Cable Length Tolerance:
   01~03m: ±25mm
   04~06m: ±50mm
   07~10m: ±75mm
   11~20m: ±100mm
   21~30m: ±200mm
   31~99m: ±300mm

5PM-M12D - 04P - FF-SL8AXX - 00AH

- 5PM-M12D: Coding: A,B,D,S,T
- 04P: Poles
- SL8AXX: Cable length:
  - 01: 01Meter
  - 02: 02Meters
  - .
  - .
  - 99: 99Meters
- 00AH: Standard

Remark: This drawing is a controlled document for Cymanu. All specifications are subject to change without prior notice.

		DRAWN: K. ZHAO	DATE: 08/10/2021	PART NO: 5PM-M12D-04P-FF-SL8AXX-00AH
SIZE: A4	SCALE: 4 : 3	CHECKED: T. Pan	DATE: 08/10/2021	TITLE: M12D, Straight headed female end
UNIT: mm	SHEET: 1 / 1	APPROVED: H. JIANG	DATE: 08/10/2021	CUSTOMER:

Cymanu® 暘宇電子
NINGBO CHANGYU ELECTRONICS MANUFACTURING CO., LTD
Email: sales@cymanu.com WWW.CYMANU.COM