REV	ECN	SIGN	DATE	DESCRIPTION
1.0	V0	K. ZHAO	12/10/2020	

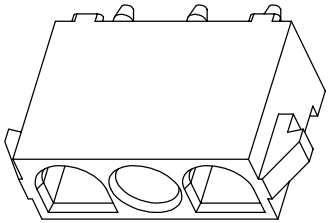

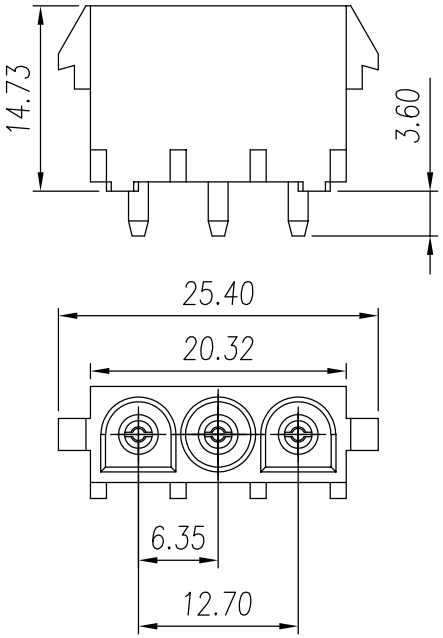

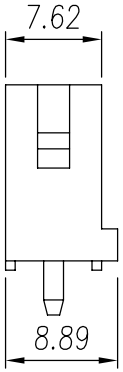

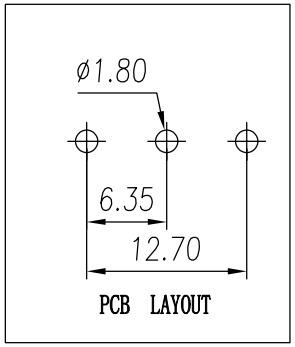

NOTES:

1. Pitch : 6.35 mm, Poles : N= 03 P
2. Rate voltage(V): 600 ,Rate current(A): 12
3. Operating temperature: −40°C~+105°C
4. Diameter for matched male terminal: 2.13mm
5. RoHS Compliance
6. Material: Housing PA66,UL94V−0
   Pin Phosphor bronze,Sn plated

43000803YY10C

- 43000803 — Series No
- YY — Color:
  - 1Y,white
  - 2Y,black
  - 3Y,grey
  - 4Y,green
  - 5Y,blue
  - 6Y,yellow
  - 7Y,transparent
  - 8Y,brown
- 10C — Standard

	linear dimension							⌯	—	▱	//	⊥
variable range	to 10	over 18 to 30	over 30 to 50	over 50 to 80	over 80 to 120	over 120 to 160	over 160 to 200	all	to 5	over 5 to 30	over 30 to 120	over 120 to
tolerance	±0.15	±0.25	±0.35	±0.45	±0.60	±0.75	±0.90	0.5	0.025	0.06	0.12	0.4

Remark: This drawing is a controlled document for Cymanu. All specifications are subject to change without prior notice.

		DRAWN: K. ZHAO	DATE: 12/10/2021	PART NO: 43000803AYY10C
SIZE: A4	SCALE: 5 : 3	CHECKED: C. LU	DATE: 12/10/2021	TITLE: PCB connector
UNIT: mm	SHEET: 1 / 1	APPROVED: H. JIANG	DATE: 12/10/2021	CUSTOMER:

Cymanu® 暘宇電子
NINGBO CHANGYU ELECTRONICS MANUFACTURING CO., LTD
Email: sales@cymanu.com WWW.CYMANU.COM